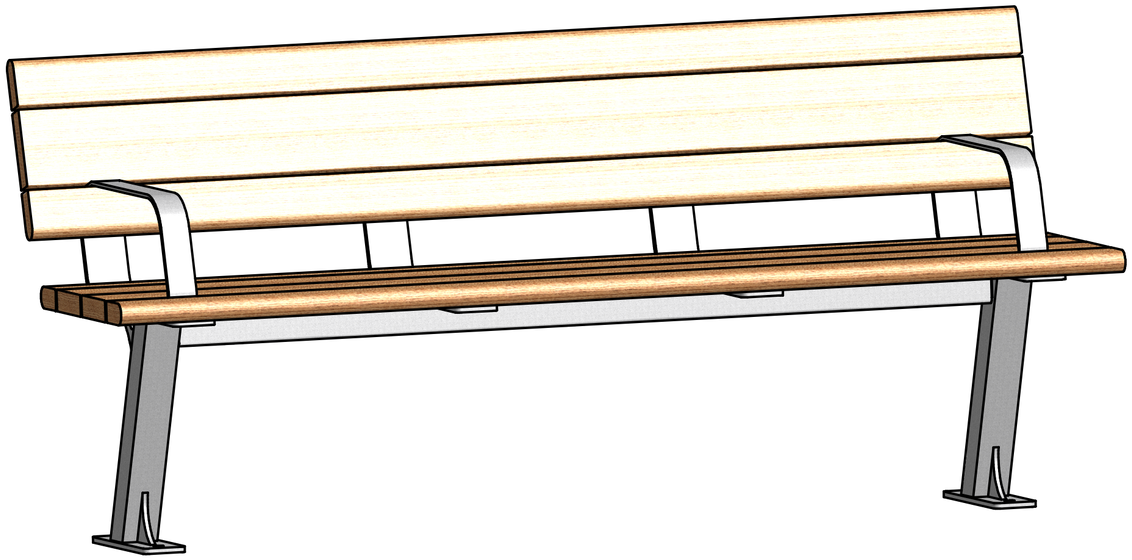

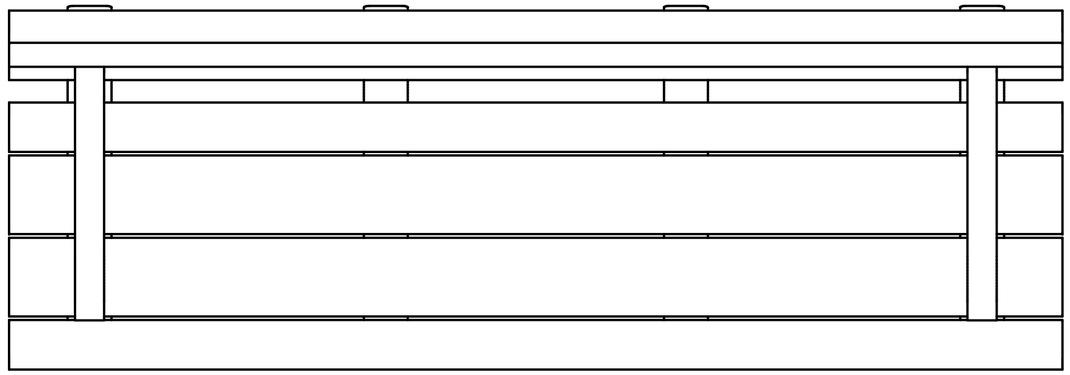

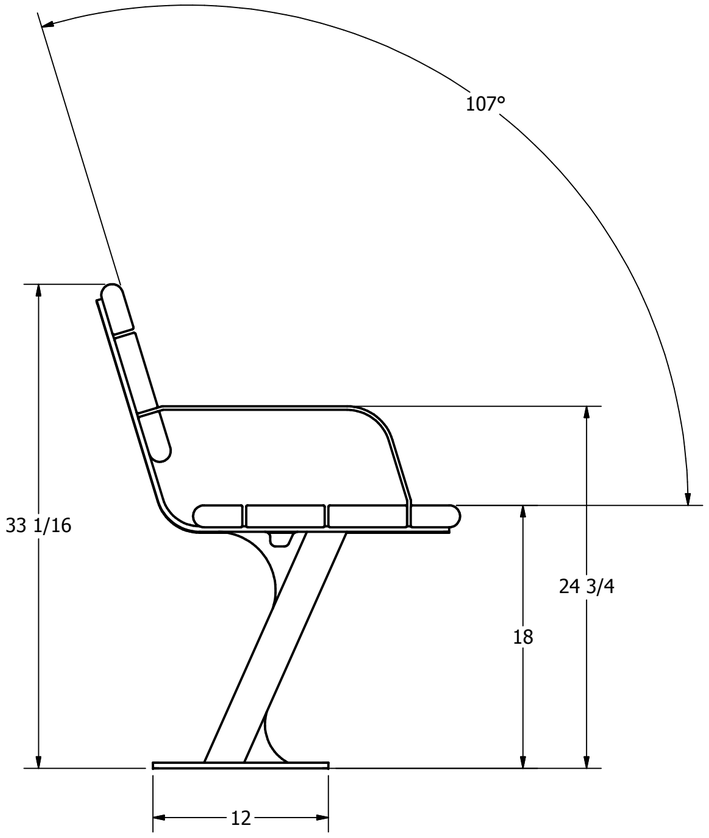

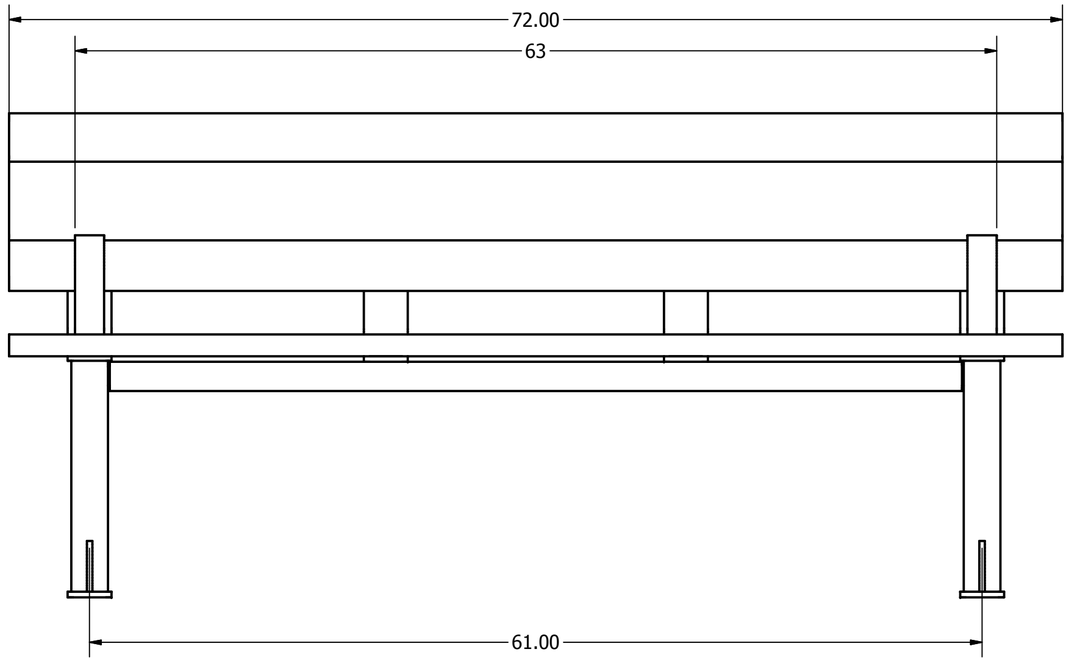

DRAWN DRESENER	15/10/2008	Wishbone Industries
CHECKED DRESENER		
QA	30/10/2008	TITLE
MFG DRESENER	30/10/2008	BAYVIEW BENCH ASSEMBLY
APPROVED DRESENER	30/10/2008	

PROPRIETARY AND CONFIDENTIAL

THE INFORMATION CONTAINED ON THIS DRAWING IS THE SOLE PROPERTY OF WISHBONE INDUSTRIES LTD.

ANY REPRODUCTION IN PART OR WHOLE WITHOUT WRITTEN CONSENT OF WISHBONE INDUSTRIES LTD IS PROHIBITED.

TOLERANCES UNLESS OTHERWISE SPECIFIED
FRACTIONAL +/- 1/32
TWO DECIMAL +/- .015
THREE DECIMAL +/- .005

ANGLE +/- 1°

SIZE		DWG NO	REV
C		BV-6	NEW
SCALE		SHEET 1 OF 2	